Francois Nielsen

The Nature of Social Reproduction: Two Paradigms of Social Mobility

(doi: 10.2383/28771)

Sociologica (ISSN 1971-8853)
Fascicolo 3, novembre-dicembre 2008

The Nature of Social Reproduction: Two Paradigms of Social Mobility

by François Nielsen

doi: 10.2383/28771

Introduction

People are keenly interested in their own socioeconomic achievement and in that of others, and have an intuitive understanding of what constitutes success. In my native French people say that someone has *bien réussi*, or has *percé*. In American English saying that someone is "doing well" or "doing really well" are codewords for a satisfactory income and social recognition. Most of us recognize a wide range of good career outcomes: school teacher, physician, lawyer, surviving artist. Sociological research has shown that evaluations of the relative goodness of occupations by members of industrial societies tend to be highly consistent across social classes and across countries [e.g., Ganzeboom, Treiman, and Ultee 1991]. However we recognize that evaluations of occupations may vary by social milieu and historical period. From our vantage point in the Twenty-first century, for example, we may not fully appreciate the achievements that the job of *cantonnier* (road maintenance official) or *chef de gare* (train station chief) represented in Nineteenth century France [Robb 2007].

We may draw upon our own experience and the experiences of people and families around us to infer something about the process of social mobility. We all know of families that seem to do no wrong, where all the children find their ways in life. We also all know a child from a "good family" who does not end up as well as hoped, and someone from an impoverished background who experiences unexpected success. Siblings born to the same parents and raised in similar conditions

can vary greatly [Rowe 1994]. This diversity of outcomes of siblings gives us a clue that the family environment does not guarantee uniformity of results.

A radical upheaval is taking place today in our understanding of the processes of socioeconomic achievement. This is because two vastly different and seemingly contradictory scientific perspectives that inform us about social mobility are coming together. On one hand there is a vast body of research on comparative social mobility. On the other is a sophisticated tradition of behavior genetic research. Both perspectives have some face value based on part of our personal experience with social mobility. On one hand we feel that the way children are raised in their families, the role models they observe, the aspirations they form, the childhood friends they have and the contacts they establish are of paramount importance in determining their future. Sociological research on the process of intergenerational mobility finds that the achievements of children and that of their parents are correlated, for such traits as education, occupational status, income, and wealth. On the other hand behavior geneticists have accumulated a vast corpus of results showing that for some traits closely related to social mobility, such as IQ or educational achievement, the effect of the family environment is relatively small by adolescence and vanishes completely by late adulthood. The role of genes, by contrast, becomes increasingly important over the life course. (The technical meaning of this pattern will be discussed more precisely later.)

Following a literature that flared momentarily in the 1970s and has recently reemerged, this paper attempts to combine these two perspectives, with their seemingly contradictory findings, into a deeper understanding of the process of social mobility [e.g., Eckland 1967; Jencks and Tach 2006]. I will argue that combining the insights of comparative social mobility research with those of behavior genetics results in a model that has rich and surprising implications for understanding the social world around us.

Paths to Success

Professional discussions of social mobility processes can easily slip into abstraction, so I find it useful to look at condensed biographies of real people to anchor my exposition. These stories – mostly of success – illustrate the variety of paths to socioeconomic achievement.

Future coalminers. When I was a child in Belgium I spent a summer in a preventorium owned by the health cooperative of the Socialist Party. It was the year *Rock Around the Clock* came out, and one of the boys could imitate the sound of

Bill Haley and His Comets perfectly. Several of the boys were from the coal mining areas around Liège. Some were already planning to become coalminers themselves. In hushed tones of anticipation these seven-year olds were boasting how they were going to leave school as soon as they reached the end of compulsory schooling (14 at the time) and join their fathers and uncles going down the mine. I never knew what became of them, but they may not have been able to realize their dream as many mines, depleted, were closed a few years later.

Holden Thorpe was installed in October 2008 at the age of 44 as Chancellor of my university, University of North Carolina at Chapel Hill (UNC-CH). Born in the State to a father attorney and mother director of a regional theater company, Thorpe obtained a BA at UNC-CH and a PhD in chemistry at California Institute of Technology. Back to UNC-CH on the faculty, he was quickly promoted through the ranks to Department Chair, to Dean of Arts and Science, and to Chancellor. Among those who know him, including his extended family, there is general awe at his great intellectual powers and wide ranging interests. The term "Renaissance man" is often used by people, with sincerity, to describe him. His salary as Chancellor is about the same as that of the President of the United States.

Supermodel *Kate Moss* was born in 1974 in England. Her mother was a boutique manager and her father an airline clerk. She received mediocre grades in school but excelled at sports. At the age of fourteen she was noticed by the director of a New York modeling agency at JFK Airport as she and her family were coming back from a vacation in the Bahamas. After a highly successful career in modeling and advertising, Moss is one of the richest women in England. In October 2008 the British Museum unveiled a statue of her by sculptor Marc Quinn entitled *Siren*, made of 50 kg of gold and said to be the largest gold statue made since the era of Ancient Egypt.

Mystery writer *Tony Hillerman* (1925-2008) was a decorated World War II veteran who taught journalism at the college level. Many of his best-selling novels are set in the Four Corners area of the U.S. Southwest, involving Joe Leaphorn and Jim Chee of the Navajo tribal police. Hillerman, born in Oklahoma and not a Navajo himself, had a childhood fascination for Native-American culture and was decisively influenced by the books of Australian writer Arthur W. Upfield (1890-1964), whose own hero was a half-Aboriginal Australian. In the 1990s, thanks to the sale of his books, Hillerman was one of the wealthiest men in the State of New Mexico.

These anecdotes, and many others that could be told, illustrate the variety of paths to socioeconomic success. My would-be coalminer friends' career ideal provides a glimpse of how exposure to valued role models may play a

role in social reproduction. In the strong Socialist culture of the preventorium, permeated by the singing of the *Internationale*, their ambition seemed at once admirable and inaccessible to a city boy like me. Thorpe's achievements, from the point of view of his family as well as external observers, involve exceptional and varied abilities. Kate Moss's success was certainly aided by great physical beauty, but beauty would not have been enough without adequate intellectual acumen and character. Academic success plays an ostensibly central role in Thorpe's achievement and a lesser one in Moss's. And what about environmental influences, and sheer luck? Where would Kate Moss be if the accidental encounter in JKF had not taken place? Did Moss's mother's work as a boutique manager influence Kate toward fashion? Thorpe's middle-class and artistic family upbringing must have nurtured his talents, but this childhood experience by itself would be an insufficient explanation of his success, as many others with similar childhoods have more ordinary careers. One only has to turn the pages of Tony Hillerman's novels to recognize the intelligence and imagination, but there is the additional role of a special childhood passion for other cultures and the decisive encounter, across time and geographical distance, with the work of Upfield.

Paradigm I: Status Achievement and the Rise and Fall of Modernization Theory

In a modern industrial society there are many precursors and criteria of socioeconomic success. These include: *a*) scores on IQ and other tests of cognitive abilities including aptitude, achievement and admission tests; *b*) success in school measured as grades or class rank; *c*) educational continuation through secondary school, college, and graduate degrees, summarized as highest degree earned or years of education; *d*) relative quality or prestige of college attended; *e*) prestige of one's occupation, employment status (employed vs. unemployed); *f*) financial success measured as wages, income, poverty status, and wealth (assets); *g*) political position and influence (clout); *h*) in some occupational pursuits criteria of success may include number of scientific publications and citations, nominations to learned societies, being pursued by paparazzi, and having a 50 kg gold statue of oneself in the British Museum.

The different measures of success differ in several ways. First, measures of ability or cognitive achievement based on test scores are typically normally distributed, only partly so by design [Jensen 1998]. These scores can often be reasonably assumed

to be the sum total of many independent factors, genetic or environmental in origin, each of which has a small influence on the outcome, thus fulfilling the conditions of the central limit theorem. By contrast other measures of achievement, notably income, wealth, and number of publications by scholars, tend to have a skewed distribution, with a long tail toward high values. These measures of success typically involve some degree of competition between individuals, and often involve an autocatalytic process, in which an initial advantage facilitates a further increase, as in "the rich get richer" [Frank and Cook 1995].

Second, the degree to which a dimension of success can be directly manipulated by third parties, such as parents, varies. For example, while parents can help their child obtain a better score on a test indirectly, by providing extra training, intellectually stimulating activities, etc., the potential effectiveness of such efforts is limited by the student's own level of abilities, as the parents rarely can stand over the shoulder of the child during the test and whisper the correct answers. On the other hand, resourceful parents might be better able to insure that a child goes to a good college, gets a good job, and perhaps wins an election, irrespective *in part* of the child's intellectual abilities or innate political talent. Wealth can be transmitted directly through the social mechanism of inheritance. Thus one would expect that the strength of mechanisms of social reproduction varies with the particular dimension of socioeconomic success considered. For instance one would expect the impact of the family of origin, net of genetic endowment, to be less for cognitive abilities than for wealth.

Third, the pathways to success, and the underlying qualities that insure success, can be more or less diverse according to the dimension considered. The path to high educational attainment, for example, may be more standardized – even stereotyped – than the path to financial success. The underlying abilities that favor academic achievement may likewise be more homogeneous than those favoring financial success.

The paradigmatic model of socioeconomic achievement originated in the work of Blau and Duncan [1967]. A typical example, based on data from the 1989 General Social Survey, is depicted in Figure 1. The correlations from which the path model is calculated are presented in Table 1. The model includes only the family background measures for the father, consistent with Blau and Duncan's [1967] original study – an approach necessitated by low levels of college level education and employment outside the home by mothers of respondents at the time. The model of Figure 1, while estimated from later data, shows patterns strikingly similar to those found by Blau and Duncan [1967; see also Duncan, Featherman, and Duncan 1972; Hauser *et al*. 2000; Solon 1992]:

1. The direct effects of father's occupational prestige and father's education on respondent's occupational prestige are non significant (Blau and Duncan did find a significant effect for father's education, but this was small). The weakness or absence of direct effects of father's achievement on respondent's occupational prestige is taken as evidence that there is little *direct* social reproduction of occupational status.

2. On the other hand there is a substantial *indirect* effect of father's occupational prestige and father's education on respondent's occupational prestige, and much of that indirect effect occurs through respondent's education. For example, in Figure 1 the total effect of father's education on respondent's occupational prestige is (0.31×0.48)+(0.28×0.41×0.48)+(0.28×0.12)=0.238. This suggests that education is a principal mechanism by which social inequalities are reproduced.

3. A large part (0.79×0.48=0.379) of the total association (0.556) between respondent's education and respondent's occupational prestige is driven by respondent's education *residual factors*, which are (by definition) independent of social origins. This pattern is interpreted as showing a high degree of opportunity, as it is taken as a clue that occupational achievement is driven by unmeasured personal motivations and abilities, that are inherent in the individual and not associated with parental status, and thus somehow represent "merit."

TAB. 1. *Correlations for Path Model of Figure 1*

	F's Occ	F's Ed	R's Sex	R's IQ	R's Ed	R's Occ
F's Occ	1.000					
F's Ed	0.476	1.000				
R's Sex	-0.038	-0.040	1.000			
R's IQ	0.177	0.293	0.014	1.000		
R's Ed	0.273	0.474	-0.108	0.522	1.000	
R's Occ	0.192	0.292	-0.043	0.379	0.556	1.000

Source: General Social Survey 1989.

Legenda: F's Occ = Father's occupational prestige; F's Ed = Father's education in years; R's Sex = Respondent's sex [1. male, 2. female]; R's IQ = Respondent's score on a 10-item vocabulary test; R's Ed = Respondent's education in years; R's Occ = Respondent's occupational prestige.

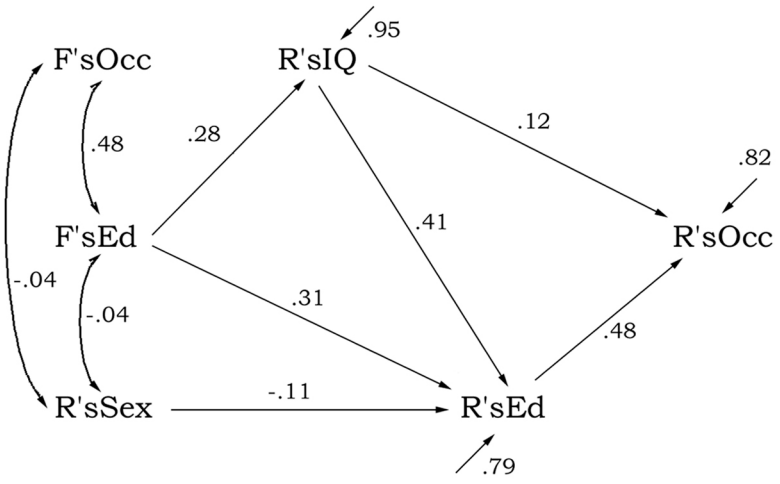

FIG. 1. Path Model of Socioeconomic Success (See Table 1 for details).

Blau and Duncan's approach to social mobility was inspiring, as it seemed to lend itself to meaningful normative interpretations. Sociologists set out to explore a number of hypotheses suggested by the new paradigm. 1) Given the increasing importance of knowledge and technical competence in industrial (and post-industrial) society, one would expect that the effect of education on success (as measured by occupational prestige and income) should increase with development. 2) Conversely, as opportunity increases the association between family background and socioeconomic success should decline. 3) As a corollary, in comparing societies at different levels of development, one should find that the more developed societies are characterized by stronger effects of education on occupational achievement and weaker effects of family status as measured by father's education and occupation. These predictions, summarized by Ganzeboom, Treiman, and Ultee [1991] together with studies providing empirical support for them, have been collectively labeled *modernization theory*.

A later comprehensive review of the comparative social mobility literature finds little consistent support for modernization theory [Breen and Jonsson 2005]. Effects of family background compared across countries and across time do not seem to exhibit the expected pattern of association with economic and industrial development. Hout and DiPrete [2006] go so far as to conclude that "modernization theory is wrong."

What went wrong? Modernization theory is the embodiment of ideas about the evolution of modern societies that are viewed as almost self-evident by social scientists. Why is empirical support for these very plausible predictions so elusive? The answer to these questions lies in a second, so far largely submerged paradigm of social mobility research.

Paradigm II: Genes, Environment, and Success

From individual biographies, or from the kind of survey data used by sociologists, one cannot distinguish the roles in socioeconomic success of native abilities and talents, on one hand, and of family influences and support, on the other. To do this one needs to turn to other models based on different kinds of data. Behavior geneticists – the consecrated term, in part a misnomer because traits other than behaviors can be studied with the very same models – use a number of designs to unravel the roles of genetic and environmental influences [Carey 2003; Freese 2008; Plomin *et al.* 1997; Rodgers *et al.* 2008]. One of the most powerful designs is the classical twin study, which compares monozygotic (MZ) twins and dizygotic (DZ) twins raised together. In this design a trait is measured on a set of MZ twins (who share all their genes) and a set of DZ twins (who share on average half their genes). Both kinds of twin pairs have been raised together and thus share the same family environment. The classical twin design is illustrated in Figure 2 for grade point average (GPA), a measure of school success.

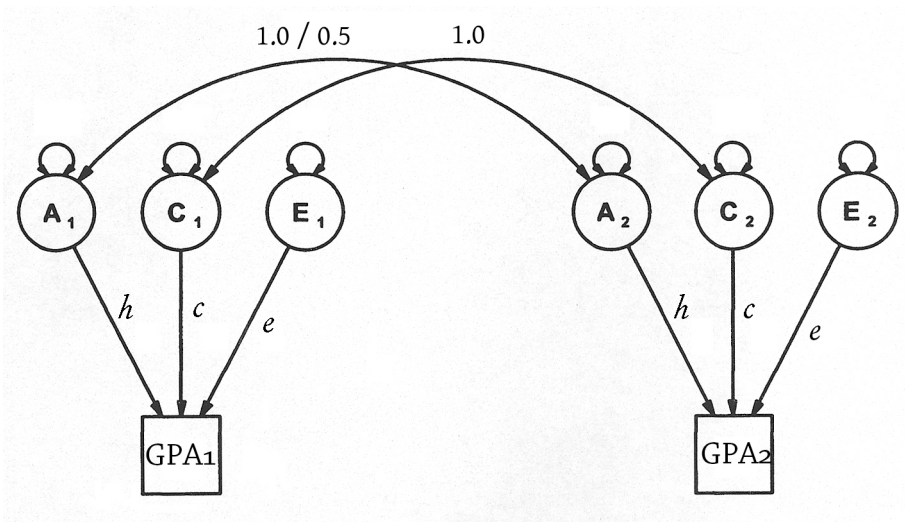

FIG. 2. ACE Model for GPA.

Legenda: A = Genotype; C = Common environment; E = Unshared environment; GPA = Grade point average. Subscripts refer to twin 1 and twin 2. A_1 and A_2 assumed correlated 1.0 for MZ twins, 0.5 for DZ twins. C_1 and C_2 assumed correlated 1.0.

The model in Figure 2 shows the GPA of each twin as determined by the effect of the genotype A (a number representing the overall contribution of the genes of the individual to the trait), and the common environment C (a number representing the overall contribution of the factors in the environment that tend to make the twins similar on that trait). The GPA for each individual is also determined by the specific

(or unshared) environment E, a number representing all factors in the environment of the twins that tend to make them dissimilar on the trait. It is not possible to ever measure the actual value of A, C, and E for any single individual. These are latent (unobserved) factors whose meanings are defined by the assumptions made about their intercorrelations. These assumptions are that: *a*) following genetic theory, the genotypes A_1 and A_2 of the twins are correlated 1.0 for MZ twins and on average 0.5 for DZ twins; *b*) the common environments C_1 and C_2 of the twins are correlated 1.0, the same for both kinds of twins; *c*) the unshared environments E_1 and E_2 are uncorrelated; and *d*) the latent variables A, C and E are assumed to have mean 0 and standard deviation 1, and the observed values of GPA are also standardized with mean 0 and standard deviation 1.

With these assumptions we *can* estimate the contributions of the latent factors to GPA from the twin data; these effects are represented for factors A, C, and E by standardized regression coefficients h, c, and e, respectively (the notation h for the effect of A is traditional). Estimates of the parameters of the model are based on a study of adolescents in U.S. schools [Nielsen 2006]. The empirical data consist of two numbers, the (ordinary product-moment) correlations of the GPAs of the twins, for both kinds of twin pairs. In this case these numbers are

$$r_{MZ} = 0.660$$

and

$$r_{DZ} = 0.332,$$

denoting the correlations for MZ twins and DZ twins, respectively. By the rules of path analysis the correlations r_{MZ} and r_{DZ} can be decomposed as

$$(1) \quad r_{MZ} = h^2 + c^2$$
$$(2) \quad r_{DZ} = 0.5h^2 + c^2$$
$$(3) \quad 1 = h^2 + c^2 + e^2$$

Equation 3 derives from the fact that the variance of GPA, which is the sum of the components, is equal to one because GPA is standardized. By subtracting the first two equations one finds that the heritability of GPA can be calculated as

$$h^2 = 2(r_{MZ} - r_{DZ})$$

that is, twice the difference between the correlations for MZ and DZ twins. Once we have h^2 we can find c^2 by subtracting h^2 from Equation 1, i.e.,

$$c^2 = r_{MZ} - h^2.$$

And finally, the contribution e^2 of unshared factors is recovered from Equation 3 as

$$e^2 = 1 - h^2 - c^2.$$

Replacing the sample correlations for GPA

$$r_{MZ} = 0.660$$

and

$$r_{DZ} = 0.332$$

in these formula, we find:

$$h^2 = 2(0.660 - 0.332) = 0.656$$
$$c^2 = 0.660 - 0.656 = 0.004$$
$$e^2 = 1 - 0.656 - 0.004 = 0.340$$

These results give us an important insight into the process of socioeconomic success. The quantity h^2, representing the proportion of the variance of a trait that is contributed by the genotype, is called the *heritability* of the trait. For GPA heritability is estimated as 0.656, which means that about 66 percent of the variation in GPA across adolescents in many different schools in the U.S. (in the later years of the Twentieth century when the study was carried out) are associated with differences in genetic factors. While this finding may sound preposterous at first, as it is difficult to think of genes "for" GPA, it makes more sense if one considers that GPA represents an overall outcome of many specific traits, including cognitive abilities, but also personality traits such as conscientiousness and even the ability to sit still, as overall grades in school represents a combination of subjective assessments by teachers as well as scores on formal tests and homework grades in a number of subject fields.

The influences associated with *C*, the shared environment, include all the aspects of the experience of twins that tend to make their grades similar. The quantity c^2,

representing the proportion of the variance of the trait contributed by the shared environment, is sometimes called the *environmentality* of a trait (although some people find the term difficult to pronounce). The component c^2 subsumes the effects of all the variables that one typically associates with "social class," such as financial resources, neighborhood quality, presence of role models suggesting the desirability of good grades, quality of the schools, and "cultural capital." This factor would also include characteristics of the neighborhood, such as relative safety, or cultural traditions of the family that are independent of social class, such as speaking a language other than the one of the majority population or traditional emphasis on education. The model assumes that the combined effect of all these shared environmental factors is to make the GPAs of twins – both MZs and DZs, to the same extent – more similar. For GPA c^2 is essentially zero (0.004), suggesting that all the influences that fall under the shared environment category, including social class, play no significant role in explaining variation in grades among these adolescents.

Finally the unshared environment component e^2 combines all environmental influences that would tend to make the scores of twins *dissimilar*. These may include accidental events, such as a disease contracted by one twin and not the other, other idiosyncratic influences such as different sets of friends that would enhance (or depress) the grades of one twin but not of the other, or parental preference of one sibling over the other (insofar as that preference differentially affects the grades), and measurement error.[1] Estimated e^2 for GPA is a substantial 0.340.

Results such as these – strong effect of genes, negligible effect of the shared environment, substantial effect of the unshared environment – may appear unexpected to social scientists inclined to assume that characteristics of the family environment (including social class) are paramount in explaining the diverse trajectories of success of individuals in society. The surprising fact is that such a pattern is not idiosyncratic to GPA which is used as an illustration in this paper. The same pattern obtains for many traits related to cognitive functioning and personality [Barrick and Mount 2001; Farkas 2003; Loehlin 2005]. In the late 1980s researchers have found that the relative weights of the three latent factors of the behavior genetic model evolve in a systematic fashion in the course of childhood and the transition to adulthood [Plomin and Petrill 1997]. The phenomenon is illustrated with results for intelligence measured on Dutch twins at different ages reproduced in Table 2 from Boomsma, Busjahn, and Peltonen [2002]. At age five, $h^2 = 0.30$, $c^2 = 0.45$ and $e^2 = 0.25$ so that while heritability is already substantial, the shared environment is the principal determinant of variation in intelligence at that age. By age

[1] The nature of the unshared environment for general intelligence is discussed in Jensen 1998.

18, however, the effect of the shared environment has disappeared; the predominant influences on intelligence are the genes (0.84) and the unshared environment (0.16). The last three rows of the table show that the Dutch results are similar to those from a U.S. sample of adolescents for verbal IQ and educational plans, as well as GPA.

TAB. 2. *Behavior Genetic Estimates from Twin Data for Some Human Traits*

Trait (average age)	h^2	c^2	e^2
HDL Cholesterol (44) [a]	0.72	0.0	0.28
Birth Weight (0) [a]	0.10	0.55	0.35
Smoking [Yes/No], males (18) [a]	0.66	0.20	0.14
Smoking [Yes/No], females (18) [a]	0.35	0.55	0.10
Intelligence (5) [a]	0.30	0.45	0.25
Intelligence (7) [a]	0.50	0.25	0.25
Intelligence (10) [a]	0.62	0.20	0.18
Intelligence (16) [a]	0.58	0.0	0.42
Intelligence (18) [a]	0.84	0.0	0.16
Intelligence (27) [a]	0.86	0.0	0.14
Verbal IQ (16) [b]	0.54	0.14	0.33
Grade Point Average (16) [c]	0.66	0.0	0.34
Educational Plans (16) [b]	0.60	0.3	0.37

[a] Boomsma, Busjahn and Peltonen [2002].

[b] Nielsen [2006].

[c] Author's calculations from Add Health siblings data [Harris *et al.* 2006].

With interesting exceptions (see the results for birth weight and for smoking in Table 2) the general pattern of findings such as the one for GPA or those reported in Table 2 has been replicated in many studies and is essentially beyond doubt for many human traits. The pattern has been formulated by Turkheimer [2000] as *the three laws of behavior genetics*:

1. All human behavioral traits are heritable (i.e., h^2 is substantial).

2. The effect of being raised in the same family is smaller than the effect of the genes (i.e., $c^2 < h^2$).

3. A substantial portion of the variation in complex human behavioral traits is not accounted for by the effects of genes or families (i.e., e^2 is substantial).

However tongue-in-cheek Turkheimer's three laws may sound, they represent in fact a rather conservative summary of the research evidence. Thanks to best-selling popular books, the lessons of behavior genetic research have begun to diffuse into the educated public [Harris 1998; Pinker 2002].

We still cannot say that Holden Thorpe's success is due to his genes, rather than his intellectually stimulating childhood. Nor can we say how much the exquisite arrangement of molecules in Kate Moss's face has to do with her genes, rather than the hearty British fare (one presumes) served in the family home, or some complex interaction of the two. But we can say with some confidence that on the basis of many studies the variation in cognitive ability and educational achievement among people in industrial societies beyond late adolescence is likely to be more strongly related to genetic differences among individuals than to differences in their family environments, just as Turkheimer's second law asserts.

Combining the Paradigms

The models of socioeconomic success associated with comparative social mobility research, which views family background as an important factor in individual success, and the behavior genetic approach that finds a declining impact of the family environment by late adolescence, appear to be so dramatically different as to be incompatible. It may seem that a resolution would necessitate the silencing of one faction by the other. Work representing a trend of reconciliation has recently resumed, however, rekindling a tradition of research that had prospered briefly in the early 1970s and earlier in economics and sociology [Behrman *et al.* 1980; Behrman and Taubman 1995; Eckland 1967; Heath *et al.* 1985; Jencks *et al.* 1972; Taubman 1977; Taubman 1995a; Taubman 1995b]. In this section I outline a possible synthesis along lines inspired by the reemerging research [Adkins and Guo 2008; Björklund and Jäntti 2000; Björklund, Lindahl, and Plug 2006; Bowles and Gintis 2002; Bowles, Gintis, and Osborne Groves 2005; Jencks and Tach 2006; Nielsen 2006].

I begin by rewriting a simplified version of the achievement model, but one that is genetically aware. For illustration purposes suppose that the trait under consideration is years of education. From genetic theory one can write the structural equations model for the correlation r_{FC} between years of education of a child (of either sex) and the education of one of the parents (say the father to pursue the Blau and Duncan example) as

(4) $r_{FC} = 0.5h^2 + c'^2$

(5) $1 = h^2 + c'^2 + e'^2$

where r_{FC} denotes father-child correlation, h^2 denotes heritability as before, and c'^2 denotes the effect on child's education of the environment shared by the father and

the child. Thus c'^2 is somewhat different from c^2 (the effect on the trait of environmental influences shared by twins). As c'^2 represents the correlation between environmental influences on child education and the value of the trait (years of education) in the father, it tends to be smaller than the more inclusive c^2. (We can ignore this technical subtlety for the moment). The term e'^2 represents unshared environment influences.

Although the model of Equation (4) contains a behavior genetic component, it also corresponds to a simplified version of an achievement model, which predicts the correlation between father's education and son's education. The difference is that the father-child correlation is broken down into separate terms for the heritability h^2 and environmentality c'^2 of the trait. The simple observation that the association between parents and offspring socioeconomic success combines genetic and environmental factors, and that *the same degree of association may correspond to different shares of genetic and environmental influences*, has wide-ranging implications for understanding social-mobility processes. I explore some of these implications in the rest of this section.

Genes, Environment and Success: Normative Implications

When looking at father-child (or, generally, parent-child) correlations for education, occupational prestige, and income, conventional intergenerational social mobility assumes, often tacitly, that the mechanisms responsible for the correlation are environmental in nature. Thus achievement of child resembles achievement of father because the successful father serves as an inspiring role model and because abundant food, intellectual stimulation, health care, and so on, nurture the child's success. Resourceful families can provide many of these ingredients of achievement, less resourceful ones fewer. The strength of the father-child association measures the impact of these family resources. Thus, in that view, the strength of the father-child association measures the strength of social reproduction. It seems to follow that as one goes from a highly ascriptive traditional society to a meritocratic modern one the strength of the father-child association should weaken, as success depends increasingly on the talent and efforts of the individual, rather than the resources of the family of origin. The disappointment of researchers presented with the conclusion that strength of the father-child association is not clearly associated with level of modernization is understandable within this perspective [Hout and DiPrete 2006].

In an article identified by Degler [1991] as one of the earliest manifestation of a return of the evolutionary perspective in the social sciences, Eckland [1967] shows

how assuming that a high degree of association between status of father and child is a measure of the strength of social reproduction is incorrect, because that association also depends on genes. Thus to provide an unbiased measure of the strength of the social mechanisms of intergenerational association of status – the effect of social reproduction – the raw correlation must be corrected for the effects of the genetic transmission of the traits that enhance achievement.

What does recognizing the role that genes play in the intergenerational transmission of social status entail? This question has recently been explored by Jencks and Tach [2006; see also Swift 2004]. Looking back at Equation (4), which breaks down the father-child association between a genetic component h^2 and a common environmental component c'^2, Jencks and Tach note that the roles of genes and common environmental factors in the association have vastly different normative interpretations. A high value of c'^2 means that differences among families in the resources they are able to use to enhance offspring success make a big difference, independent of the native abilities of individuals. This is the essence of social privilege. One may feel that fairness requires that inequality in the distribution of such resources be reduced. Access to such resources by children should be made more equal, perhaps through various forms of compensation for social disadvantage. However to the extent that the association is due to genetic transmission of traits that favor success, the normative implication is less compelling. Fewer people would argue that differences in native endowment are unjust to the same degree as differences in environmental resources, so that gifted children should be systematically disfavored in an effort to "cut them down to size" of more average children.

Why Modernization Theory Failed

The synthetic model represented by Equation (4) reveals *why* modernization theory has not found clear empirical support. Social change associated with modernization, by reducing inequality in the distribution of family environmental resources and reducing the impact of these resources on individual achievement, can bring about a reduction in the c'^2 component and thereby reduce the intergenerational correlation of socioeconomic status. This trend is consistent with the expectation of modernization theory. However another trend of modernization, increasing meritocracy and rewards to native endowment, will tend to increase the h^2 component and thereby *increase* the intergenerational correlation. That an increase in meritocracy may well contribute to an increase in the parent-offspring correlation is an unexpected consequence from the point of view of modernization theory. If these two effects

of modernization on status transmission – reduced c'^2 and increased h^2 – are of similar magnitude the intergenerational correlation may *remain the same*, even though the relative impact of the environmental and genetic factors has changed. In any case the overall impact of modernization on the intergenerational correlation is undefined without further knowledge of the underlying processes.

This crucial point can be illustrated with an example. From Table 1 the correlation between father's education and child's education is 0.474. This correlation is compatible with many combinations of values of heritability h^2 and environmentality c'^2. One possibility is that the 0.474 correlation is driven by a large heritability component, say

$$h^2 = 0.7,$$

and moderate environmentality component, say

$$c'^2 = 0.124.$$

Then

$$r_{FC} = 0.5 \times 0.7 + 0.124 = 0.474.$$

Another possibility is that heritability is small, say

$$h^2 = 0.2.$$

Then the bulk of the father-child correlation must be due to family environmental factors, with

$$c^2 = 0.374,$$

so that

$$r_{FC} = 0.5 \times 0.2 + 0.374 = 0.474.$$

Thus the *same* value of the father-child correlation is compatible with very different social mobility regimes. A society characterized by the first set of parameters (high heritability, low environmentality) would be considered meritocratic, since achievement depends on genetic potential more than on circumstances of the family

environment. The second set of parameters (low heritability, high environmentality) would correspond to a more rigid system of social reproduction where genetic potential of the child has relatively little impact on eventual outcome, relative to the family environment. The latter system would be described as more ascriptive, or as less meritocratic, or as offering fewer opportunities for achievement.

The behavior genetic decomposition of the father-child correlation of Equation (4) provides a central clue why modernization theory has failed to find strong empirical support. Modernization theory predicts the size of the association between family background (e.g., father's education) and respondent's achievement (e.g., respondent's education), assuming that a high (low) correlation is a direct measure of high (low) social rigidity. The prediction is not compelling, however, because the zero order intergenerational association is the combination of a component (h^2) that represents high return to native talent, i.e., meritocracy, and one component (c'^2) that represents the strength of social reproduction mechanisms, i.e., the weight of privilege [Jencks and Tach 2006; Nielsen 2006]. While modernization may well attenuate the intergenerational correlation by decreasing the weight of privilege (by reducing c'^2), it can also *increase* it (by increasing h^2). As modernization theory does not distinguish between genetic and environmental components of the intergenerational correlation, it cannot make definite predictions on how the intergenerational association of status will be affected by changes in the mobility regime. It follows that empirical trends in intergenerational correlations by themselves are inconclusive with respect to modernization theory. This fundamental difficulty is at the root of the empirical failure of modernization theory [Breen and Jonsson 2005; Hout and DiPrete 2006].

An Example of Genetically-Informed Social Mobility Research

One may well wonder at this point how one would go about carrying out the genetically-informed research needed to go beyond the current impasse of comparative social mobility research. Such research already exists. Heath *et al.* [1985] have data on educational attainment (years of education) for Norwegian MZ and DZ twins for three birth cohorts (1915-1939, 1940-1949, 1950-1960). They use data on same sex twins to estimate a behavior genetic model of educational achievement separately by sex and by birth cohort. Consistent with the model presented earlier they interpret heritability h^2 as measuring meritocracy. As more liberal social and educational policies were introduced in Norway after World War II they conjecture that heritability of educational attainment should be greater (and environmentality lower) in later

cohorts, as more liberal policies promoted educational opportunity, but that perhaps this interaction itself differs across the sexes. Their principal results are summarized in Table 3.

TAB. 3. *Example of G × E Interaction in Educational Achievement: Historical Trends in Educational Achievement by Sex in Norway*

	Males				Females			
Cohort	h^2	c^2	$2hac$	e^2	h^2	c^2	$2hac$	e^2
1915–1939	0.41	0.28	0.19	0.13	0.41	0.28	0.19	0.13
1940–1949	0.74	0.08	–	0.18	0.45	0.41	–	0.14
1950–1960	0.67	0.10	–	0.23	0.38	0.50	–	0.12

Source: Heath *et al.* [1985].

For the 1915-1939 cohort the estimates for heritability (0.41) and environmentality (0.28), the same for males and females, are consistent with the view that in pre- World War II Norway educational achievement was still strongly linked to family status.[2] Liberal reforms of the education system increased opportunities in the 1950-1960 birth cohort for males (h^2 = 0.67 and c^2 = 0.10) *but not for females*, for whom heritability is lower (h^2 = 0.38) and family of origin effects are still strong (c^2 = 0.50). This empirical pattern supports the conjecture that more liberal policies have increased educational opportunity for males born after World War II but have not benefited females to the same extent. Heath *et al.* [1985] conclude:

> The results presented here are clearly consistent with the hypothesis that the importance of genetic influences on educational attainment is subject to secular change. Other explanations of our findings seem implausible. (...) The most likely explanation, confirming the hypothesis of Scarr-Salapatek [1971], is that increased educational opportunity has led to an increased dependence of educational attainment on innate ability.

Following Heath *et al.* [1985] a number of studies have looked for trends in the values of h^2 and c^2 in models of socioeconomic achievement as a function of some aspect of the environment using twin studies [Baker *et al.* 1996; Guo and Stearns 2002; Lichtenstein, Pedersen and McClearn 1992; Nielsen 2006; Rowe, Vesterdal, and Rodgers 1999; Tambs *et al.* 1989]. This research shows that the behavior genetic model constitutes a powerful tool for answering precisely the kind of theoretical questions that comparative social mobility research has been posing and that, as ar-

[2] The model for the 1915-1939 cohort also includes an interaction term $2hac$, that pertains to a more complex model, discussion of which is beyond the scope of this paper.

gued earlier, cannot be answered with the typical survey data used by sociologists: Has modernization been accompanied by increased meritocracy? Do different political systems, with different institutions, differ with respect to the fluidity of their system of stratification? Are different social classes or occupational categories characterized by more or less rigidity in status transmission? The last question is discussed in greater depth in the next subsection.

Gene × Environment Interaction and Pareto's Circulation of Elites

The phenomenon demonstrated by Heath *et al.* [1985], in which the parameters of the behavior genetic model of achievement differ according to the social environment – in this case before and after liberal reforms in the Norwegian educational system, is technically called *gene-environment* (*G* × *E*) *interaction*. Scarr-Salapatek [1971] originated the hypothesis that the parameters of the behavior genetic model for a trait (specifically, IQ) could vary within a single society according to the level of resources in the social environment [see also Jensen 1981]. She reasoned that individuals growing up in environments with few resources would have fewer opportunities to express their native potential. In such unfavorable environments the effect of genes on achievement (measured as h^2) will be weaker, and the effect of the environment (measured as c^2) larger. By contrast, individuals growing up in environments supplied with abundant resources will be maximally able to express their native potential, hence h^2 will be larger and c^2 smaller. In a recent study Turkheimer *et al.* [2003] show how socioeconomic status of parents modifies heritability of IQ in young children: heritability of IQ is significantly higher in high SES environments than in low SES environments, suporting the original prediction of Scarr-Salapatek [1971]. Guo and Stearns [2002] provide further examples of the phenomenon.

The concept of G × E interaction is now the object of considerable research – including research using specific molecular genetic markers to estimate the interaction between presence of the marker and a measure of the environment [e.g., Caspi *et al.* 2003]. However, there is no consensus concerning the shape of the relationship between the parameters of the behavior genetic model (typically the magnitudes of h^2 and c^2) and the dimension of the environment believed to be involved in the G × E interaction. In particular, while it makes sense that an environment with low resources may inhibit the expression of innate potential, it is less clear what prediction should be made for environments with an overabundance of resources. One approach favored by development psychologists is to distinguish between environments in the normal range, or "humane" environments, and environments that are abusive

or severely deficient. The model is that a deficient environment, characterized as one below a minimum "humane" resources threshold, can severely inhibit the expression of innate potential, but that above the threshold, within the humane range, variation in environmental quality no longer affects the outcome. For a measure such as IQ raising environmental resources from, say, working-class level to affluent should make little difference in the expression of native potential.

Traits studied by development psychologists such as cognitive abilities or school performance, are measured by standardized test instruments. They are not subject to competitive or autocatalytic processes to a major extent. Empirically individual scores on these measures tend to be normally distributed. By contrast many outcomes characterizing adult achievement, such as income, wealth, promotion to high level positions, and prominence in a professional field, as well as political influence, are likely to depend to a greater extent on competition and autocatalytic, winner-take-all processes [Frank and Cook 1995]. For such outcomes a different perspective on the relation between expression of native qualities and socioeconomic outcomes may be required.

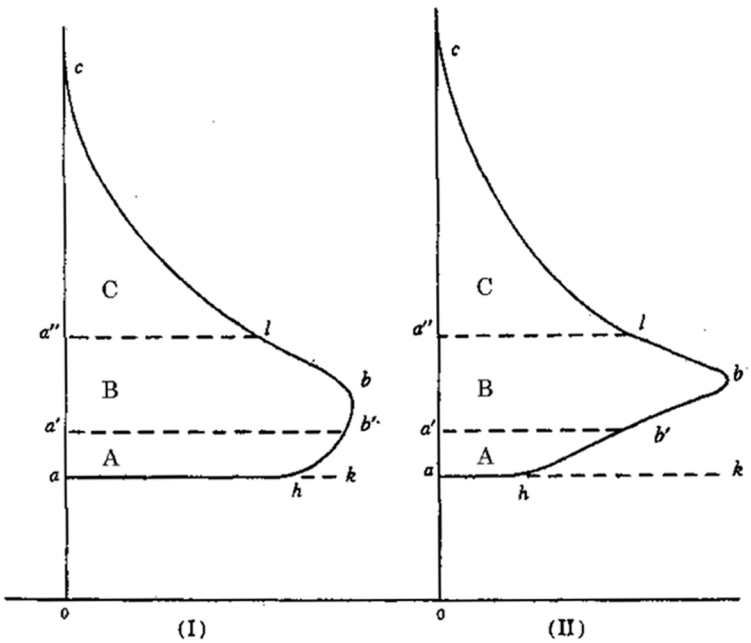

FIG. 3. Pareto's Representation of Social Structure: Comparison of the distributions of income (along the vertical axis) for an agrarian society of Antiquity (I) and an industrial society (II). Within each society, income strata A, B and C correspond to different mobility regimes; opportunities for mobility are low in A and C, maximal in B.

Source: Pareto [1909, Figure 56, p. 386, modified].

The theory of social stratification and mobility developed by Vilfredo Pareto [1909], while pre-dating the modern synthesis of genetics and evolution [Fisher 1918], represents a surprisingly modern perspective that may be viewed as "pre-adapted" to the need to integrate genetic and social-environmental explanations of socioeconomic success [Nielsen 2007]. Pareto reasons that the degree to which native talents affect social mobility and the resulting position achieved by an individual in the socioeconomic hierarchy varies among different strata of society. In Pareto's view, the nature of the interaction between social environment and native talents is not monotonic (more favorable environments allow a better expression of innate potential), or asymptotic (above a humane threshold further improvement in environment quality does not further enhance expression of innate potential), but curvilinear with low value in unfavorable environments, highest value in average environments, and low value again in environment with high resources.

Pareto's concept is depicted in Figure 3. Pareto makes a simplified distinction between three strata of society, to approximate a socioeconomic hierarchy which he conceptualizes as continuous. He reasons that even a talented individual born into the lower stratum (denoted A in Figure 3) will be unable to rise because of insufficient resources, and will remain stuck in the lower class. Individuals born into the middle stratum B will experience the maximal amount of mobility. Resources are sufficient to allow the talented to rise but not abundant enough to prevent those born with little talent from moving downward. Less obviously, an individual born into the favored class C will also be less able to reach his native potential. Even if the individual lacks talent, the abundance of resources in that stratum of the socioeconomic distribution will keep him form sinking to the corresponding lower level. Family privilege in stratum C protects individuals from downward mobility.

Pareto's view of the variation in opportunities for mobility according to the income stratum implies a curvilinear shape for the relationship between heritability and environmental resources. This concept is shown in Figure 4 (panel *c*) in contrast with two other hypotheses that have been proposed about the particular form of G × E interaction governing a specific trait: the simple model that expression of genetic potential is a monotonically increasing function of environmental resources (panel *a*), or the hypothesis (often used to explain low estimates of c^2 found in adoption studies) that environmentality is high at very low resources levels (typically not found in adoption studies) but decreases to zero (with parallel increase in h^2) within the "humane range" above a threshold level of resources (panel *b*).

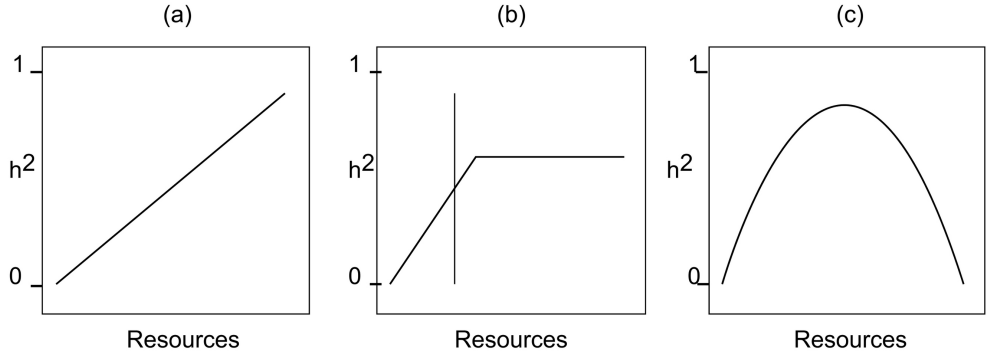

FIG. 4. Three Concepts of the Interaction of Genes with Environmental Resources in the Determination of Socioeconomic Success. *a*) Monotonic effect of environmental resources on gene expression (h^2) [Scarr-Salapatek 1971; Heath *et al.* 1985]; *b*) Tapering effect of environmental resources on h^2 within the "humane range" above the threshold of severe deprivation (dashed line); *c*) Curvilinear effect of environmental resources on h^2 with maximum effect in middle range [Pareto 1909].

Further Issues in Combining Paradigms

Combining the attainment paradigm and behavior genetic paradigm into a single model of socioeconomic attainment resolves some old puzzles and raises new questions. Some of these new avenues of research are briefly addressed in this section: the genetic architecture of socioeconomic success, the role of assortative mating, and the impact of new molecular genetic research.

Genetic Architecture of Socioeconomic Success

Different dimensions of socioeconomic success are likely to represent different mixtures of influences of genes, shared environment and unshared environment. For example, income (or its logarithm) may be both less correlated intergenerationally, less heritable and more subject to unshared environmental influences than measures more closely related to cognitive abilities, such as IQ or educational achievement [Björklund, Jäntti, and Solon 2005]. This would be expected because pathways to financial success, in contrast to academic success, may involve more varied specialized talents, a larger role of autocatalytic processes, and almost certainly a greater influence of luck (e.g., young Kate Moss running into the head of a modeling agency at the airport). Wealth and income derived from wealth may also depend more directly on the shared family environment through bequeath. The notion that wages or income may be inherently more subject to random influences than other measures of achievement was already formulated by Jencks *et al.* [1972].

Financial achievement is more likely subject to autocatalytic and "winner-take-all" mechanisms, by which success breeds further success [Frank and Cook 1995]. Such mechanisms may entail a greater impact of unshared random influences, as accidental occurrences have magnified consequences.

Within the behavior genetic research tradition methods exist not only to partition the variation of a single trait into influences of genes, and shared and unshared environment, but also to partition the *association* between different traits into components related to genes, and to shared and unshared environmental influences. For example, one can assess whether the intercorrelations among different measures of success in high school such as GPA, verbal IQ, and college plans are due to the same genes affecting all three outcomes, or to common effects on all three outcomes of the same aspects of the shared or unshared environments. It can be shown that correlations among GPA, verbal IQ and college plans are largely due to common genes, and that shared environment effects on all three measures can be attributed to a single factor of the shared environment, akin to privilege [Nielsen 2006]. The statistical technology to test various hypotheses on the *genetic architecture* of different measures of socioeconomic success is readily available [Loehlin 1996; Neale *et al.* 2003; Neale and Cardon 1992; Neale and Maes, forthcoming; Rodgers *et al.* 2008].

Figure 5 shows an empirical example, a model of adolescent school achievement estimated based on an extension of the classic twin design including six kinds of pairs of siblings living in the same household (MZ and DZ twins, full siblings, half siblings, cousins, and unrelated siblings). The measures of academic achievement are scores on the Peabody vocabulary test, a measure of verbal ability (VIQ); grade point average (GPA); and college plans, a composite measure of desire and prospect to go to college (CPL). The model represented in the figure was selected as having the best fit to the data according to the criterion of maximum likelihood following a sequence of nested tests during which a number of possible correlations and paths (those not drawn in the figure) were "pruned" as non-significant, such as direct effects of VIQ on GPA and CPL, and direct effect of GPA on CPL. It was also found that the common environment could be represented by a single latent factor (denoted C_1 in Figure 5), akin to a general social privilege factor, that affected all three measures (rather than requiring a separate latent factor for each measure). Another pattern found is that the unshared environmental factors associated with each of the measures (E_1, E_2 and E_3) are uncorrelated among themselves, a pattern which rules out certain hypotheses on the nature of these unshared factors, such as parental preferential treatment of one sibling over the other. One interesting and perhaps unexpected pattern is that while the genetic factors A_1, A_2 and A_3 affecting each measure are correlated (i.e., the sets of genes affecting the measures overlap to some extent), these correlations are not very

strong. For example, the genetic factors affecting the measures are correlated 0.431 for VIQ and GPA, 0.551 for GPA and CPL and only 0.261 for VIQ and CPL. The latter weak correlation suggests, for example, that the genetic endowments related to college intentions are only weakly related to those affecting verbal ability.

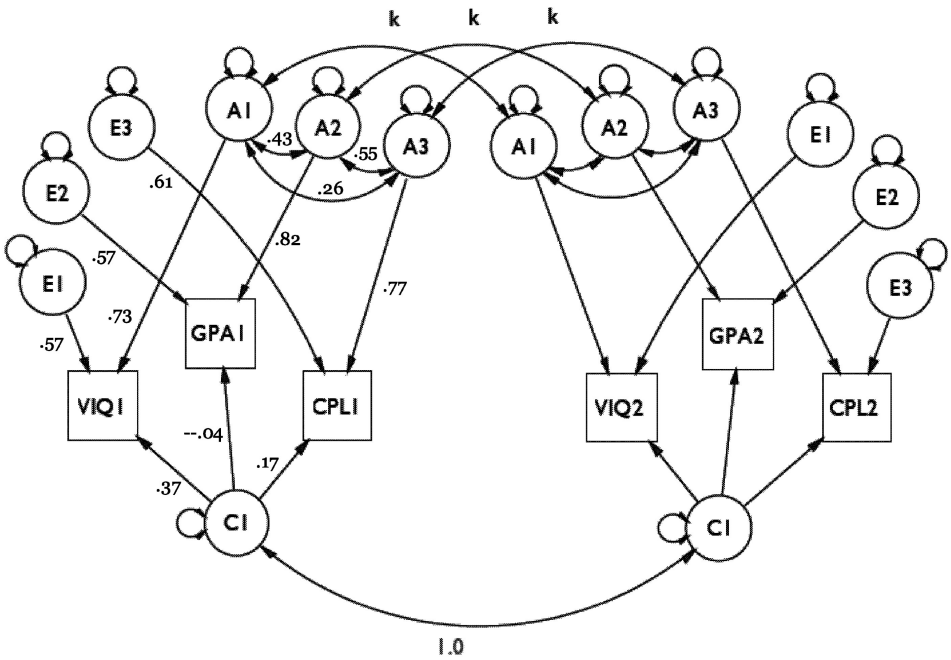

FIG. 5. Genetic Architecture of Educational Achievement for VIQ (Verbal Ability), GPA (Grade Point Average) and CPL (College Plans). A_1, A_2 and A_3 are latent factors representing genetic influences on VIQ, GPA and CPL, respectively; C_1 is a single latent factor of shared environmental influences; E_1, E_2 and E_3 are latent factors of unshared environmental influences on the three measures; k is the assumed correlation among genetic factors of siblings: $k = 1$ for MZ twins, $k = 0.5$ for DZ twins and full siblings, $k = 0.25$ for half siblings, $k = 0.125$ for cousins, and $k = 0$ for unrelated siblings.

Source: Based on results from Nielsen [2006].

Theories and empirical results bearing on the genetic architecture of the various traits that measure socioeconomic success may well usher in a new understanding of the diverse pathways to success. Such investigations have already proven useful in other fields of study. The etiology of type 2 diabetes provides an example of the unexpected complexities that can characterize the genetic architecture of a trait. There are strong genetic influences on diabetes, as indicated by an MZ twins concordance of almost 100%. Another trait, obesity, also has a strong genetic component and can contribute to diabetes. However studies have shown that the genes predisposing to diabetes, on one hand, and to obesity, on the other, consist of largely independent

sets. In other words the genetic factors influencing diabetes and obesity are uncorrelated. Such findings have direct practical as well as theoretical value.

The Role of Assortative Mating

The model of intergenerational mobility represented in Equation (4) is overly simplified, as it disregards the important and specifically human phenomenon of assortative mating. Assortative mating is the tendency of people to choose spouses who have similar values on some trait. For many uses of genetic theory, such as selective breeding in agricultural research, this mechanism can be disregarded since choice of mate is under the control of the experimenter. In humans the degree of assortative mating, measured as the correlation of the trait between spouses, varies according to the trait considered, from weak or absent for most personality traits such as extraversion [Neale and Maes, forth.], to high for IQ with typical spousal correlations around 0.4 [Jensen 1998].

The sociological literature on assortative mating (or homogamy) has focused on comparing the extent of the phenomenon across categories of education, religion or race [Rosenfeld 2008]. Sociologists have been slow to recognize that assortative mating may have important consequences for the genetic structure of the population. If a trait is at least in part heritable, i.e. subject to the influence of genes, positive assortative mating will tend to produce a correlation between the genotypes of spouses, resulting in an increase in the variance of the trait in the offspring generation. Jensen [1998, 183] reckons that "if there were no assortative mating for whatever is measured by IQ, the population variance in IQ would be decreased by about 10 to 15 percent." This phenomenon is the basis of the scenario proposed by Herrnstein [1973] and in a revised formulation by Herrnstein and Murray [1994]: If in modern society socioeconomic success depends increasingly on cognitive ability, and if cognitive ability is partly heritable – which empirical research suggests – and if people tend to marry individuals of similar abilities, it follows that the variance of cognitive ability will increase over the generations, perhaps leading to hereditary castes differentiated by level of cognitive ability. While the genetic mechanisms involved in Herrnstein's scenario are plausible, it has been objected that even strong assortative mating would be insufficent to lead to distinct, genetically heterogeneous classes due to random segregation of genes in the offspring generation [Eysenck 1973].

The statistical machinery developed by behavior geneticists to study assortative mating includes tools to: *a*) contrast alternative models of assortment, e.g., phenotypic assortment versus social homogamy assortment, as the two processes have different

genetic consequences that can in principle be distinguished given the appropriate data [Fisher 1918; Neale and Maes, forth.]; *b*) derive the consequences of assortment on a number of different, possibly correlated traits, e.g., cognitive ability as well as financial success; and *c*) allow for asymmetry between men and women in the contributions of various characteristics to attractiveness as a spouse, e.g., one can test the hypothesis that physical appearance contributes more to the attractiveness of a potential husband than that of a potential wife.

Social Mobility in Social-Evolutionary Perspective

Genetically informative data may well never be available for societies of the past, but one can at least speculate about what kinds of social mobility regimes may have existed over the long course of evolution of human societies. Lenski [1966; 2005] theorized long term swings in inequality in the distribution of power and privilege in the evolution of human societies from the hunting and gathering type (minimal inequality) to agrarian (maximal inequality) and back to lower levels of inequality with the maturation of industrial societies. Lenski links the swings in inequality to the nature of the subsistence technology of a society, which is itself characterized by the level of technological development of the society as well as available sources of subsistence in the environment. Adkins and Guo [2008] and Adkins and Vaisey [forthcoming] propose a theoretical model relating the evolution of social inequality with a genetically-oriented model of social mobility, deriving predictions relating the type of social organization with the relative strength of genetic influence on social status.

The Impact of Molecular Genetic Research

Major excitement today is generated by the fast rise of molecular genetic methods in genetic epidemiology. New dedicated chips make it possible to detect hundreds of thousands of genetic markers all along the human genome. I have said little in this paper about these developments because, strange as it is to say, while molecular genetic methods will certainly hasten the acceptance of a role of genes in human behavior, the potential impact of molecular genetic methods in understanding social mobility or any complex behavior is likely to remain limited. The principal reason for this skeptical view is that most genetic markers so far associated with traits of relevance to socioeconomic success – except for major and rare genetic conditions causing major cognitive deficit, such as fragile X syndrome – have been found to be both rare in the population and to have relatively small effects. This is true for

such traits as intelligence, but also for traits such as height, for which a genetic basis is non-controversial. For example, as of 2008 hundreds of markers associated with height have been identified. Taken together, however, these markers account for only a small fraction of the variance in height. Because of the small effect size associated with any single gene, empirical studies even based on very large samples have low statistical power and findings of an association between a marker and a trait often fail in replication. Exactly the same situation is found in molecular-genetic studies of intelligence [Posthuma and de Geus 2006].

The general conclusion that emerges from the voluminous molecular-genetic research is that genetic variation in continuous traits of social importance, including those affecting socioeconomic success, is associated with a large number of genes, each of which has a small effect on the trait considered. In other words, the polygenic inheritance model proposed by Fisher [1918] seems to hold true for the bulk of genetic effects on behavior. From this it follows that behavior genetic approaches to continuous traits using structural equations models with genetically informed data on twins and adopted children will continue to provide precious knowledge on socioeconomic achievement processes for the foreseeable future.

What then is the contribution of molecular genetic studies to the study of social mobility? There are at least two notable implications of that research. First, there is a strong rhetorical advantage in being able to pinpoint a specific gene as responsible for a behavior even when, as is typically the case, the proportion of variance in the behavior explained by the gene is very small. For many people, the observation that presence of a specific gene is associated with a trait is a convincing demonstration of the general importance of genes in behavior. Second, when a marker is found that has a reasonably strong and replicable association with a trait, it may be possible to empirically demonstrate the existence of a G × E interaction between the gene and a measured dimension of the environment in producing the outcome. Such interactions have been found, for example, for depression [Caspi *et al.* 2003] and for violent behavior [Guo *et al.* 2008].

Conclusion

I have argued in this paper that two traditionally separate approaches to social mobility, the comparative social mobility research tradition initiated in the work of Blau and Duncan [1967], and the behavior genetic tradition originating in Fisher [1918], can be reconciled in a way already envisioned by Eckland [1967] over forty years ago. In this synthetic model the behavior-genetic decomposition of the variance

in a dimension of socioeconomic success into a genetic, shared environment, and unshared environment components is used to predict the parent-child association for that dimension. The parent-child association was shown to be a composite of genetic and shared environment effects. I argued that this decomposition illuminates interpretations of the mobility model in terms of degree of meritocracy, and permits consistent reformulations of the predictions of modernization and institutional theory. The behavior-genetic decomposition of the mobility model also opens up new perspectives on the relationships among different dimensions of socioeconomic success (such as educational and economic attainment) and generates new predictions on opportunity level as function of the social environment, some of which are consistent with the much earlier ideas of Vilfredo Pareto on social stratification and mobility.

To give a flavor of the potential of this approach I conclude this paper with a list of loosely formulated hypotheses that can be easily derived from the previous discussion. These hypotheses seem to constitute a natural outline for future research in comparative social mobility and perhaps for the interpretation of existing research findings:

1. Within a society heritability of socioeconomic achievement dimensions that cannot be easily affected by deliberate activity of relatives (such as measures of cognitive ability or educational attainment) will be relatively greater in resources-rich environments (middle to upper strata) than in resources-poor ones (lower strata);

2. the strength of this G × E pattern will be greater in societies with more unequally distributed resources. As a corollary, if industrial development is associated with more equally accessible resources, strata differences in the parameters of the behavior genetic model will be weaker or absent in more developed societies (in the same way that height and BMI are almost entirely heritable today, which they may not have been two centuries ago);

3. dimensions of socioeconomic achievement may be expected to show increasing heritability and decreasing environmentality with age;

4. in a given society at a particular historical period, success-related traits that are readily affected by parents and others around the individual (such as access to quality education – but not educational achievement, wealth, and perhaps political influence) will be more environmental (have higher environmentality parameter) than traits that are less directly manipulable by outside agents (such as scores on standardized tests);

5. socioeconomic dimensions that are more readily manipulable by outsiders may show a pattern of G × E interaction that is curvilinear with respect to position in the social hierarchy, in the sense that heritability of the trait will be lower in lower strata, maximal in middle strata, and lower again in upper strata [Pareto 1909];

6. if the modernization theory is correct – that is, there is a trend of increasing meritocracy with modernization – modernization will be associated with higher heritability and lower environmentality; however the theory cannot predict the overall pattern of association (correlation) of socioeconomic achievement of parents and offspring as a function of modernization, because the parent-child association is a function of both heritability and environmentality which are expected to move in different directions with modernization;

7. if the institutional theory is correct, institutions favorable to meritocratic achievement will be associated with higher heritability and lower environmentality, but the theory cannot predict the overall pattern of association of socioeconomic achievement of parents and offspring as a function of modernization (see previous item);

8. over the long course of sociocultural evolution, there may have been a curvilinear trend of change in the role of genes versus environment in social status achievement, such that the simplest societies have high heritability and low environmentality, societies of the agrarian type have lower heritability and higher environmentality, and industrial societies have high heritability and low environmentality [Adkins and Guo 2008];

9. dimensions of socioeconomic achievement where there is a more standardized career of achievement, such as education, will in general be better explained by both behavior genetic model and traditional status achievement model than dimensions for which there are multiple pathways to success, such as income. For the latter type of dimensions the role of unshared environmental factors (including luck) is expected to be greater;

10. the genetic component of the associations between dimensions of socioeconomic achievement pertaining to the cognitive and educational domains (such as IQ and educational achievement) will be greater than the genetic component of the associations between these cognitive dimensions and financial success (measured as income or wealth). In other words, associations between cognitive traits will not only be larger but will be affected to a larger extent by overlap in their genetic components than the associations between cognitive dimensions and financial dimensions of socioeconomic achievement.

References

Adkins, D.E., and Guo, G.

2008 "Societal Development and the Shifting Influence of the Genome on Status Attainment." *Research in Social Stratification and Mobility* 26: 235-255.

Adkins, D.E., and Vaisey, S.

Forth. "Toward a Unified Stratification Theory: Structure, Genome and Status Across Human Societies." *Sociological Theory*.

Baker, L.A., Treloar, S.A., Reynolds, C.A., Heath, A.C., and Martin, N.G.

1996 "Genetics of Educational Attainment in Australian Twins: Sex Differences and Secular Changes." *Behavior Genetics* 26: 89-102.

Barrick, M.R., Mount, M.K., and Judge, T.A.

2001 "Personality and Performance at the Beginning of the New Millennium: What Do We Know and Where Do We Go Next?" *International Journal of Selection and Assessment* 9: 9-30.

Behrman, J.R., Hrubec, Z., Taubman, P., and Wales, T.J.

1980 *Socioeconomic Success: A Study of the Effects of Genetic Endowments, Family Environment, and Schooling*. Amsterdam: North-Holland.

Behrman, J.R., and Taubman, P.

1995 "Is Schooling 'Mostly in the Genes'? Nature-Nurture Decomposition using Data on Relatives." Pp. 249-267 in *From Parent to Child: Intrahousehold Allocations and Intergenerational Relations in the United States*, edited by J.R. Behrman, R.A. Pollack, and P. Taubman. Chicago: University of Chicago Press.

Björklund, A., and Jäntti, M.

2000 "Intergenerational Mobility of Socio-economic Status in Comparative Perspective." *Nordic Journal of Political Economy* 26: 3-33.

Björklund, A., Jäntti, M., and Solon, G.

2005 "Influences of Nature and Nurture on Earnings Variation: Preliminary Results from a Study of Various Sibling Types in Sweden." Pp. 145-164 in *Unequal Chances: Family Background and Economic Success*, edited by S. Bowles, H. Gintis, and M. Osborne Groves. New York: Russell Sage Foundation.

Björklund, A., Lindahl, M., and Plug, E.

2006 "The Origins of Intergenerational Correlations: Lessons from Swedish Adoption Data." *Quarterly Journal of Economics* 121: 999-1028.

Blau, P.M., and Duncan, O.D.

1967 *The American Occupational Structure*. New York: Wiley.

Boomsma, D., Busjahn, A., and Peltonen, L.

2002 "Classical Twin Studies and Beyond." *Nature Reviews Genetics* 3: 872-882.

Bowles, S., and Gintis, H.

2002 "The Inheritance of Inequality." *Journal of Economic Perspectives* 16: 3-30.

Bowles, S., Gintis, H., and Osborne Groves, M.

2005 "Introduction." Pp. 1-22 in *Unequal Chances: Family Background and Economic Success*, edited by S. Bowles, H. Gintis, and M. Osborne Groves. New York: Russell Sage Foundation.

Breen, R., and Jonsson, J.

2005 "Inequality of Opportunity in Comparative Perspective: Recent Research on Educational Attainment and Social Mobility." *Annual Review of Sociology* 31: 223-243.

Carey, G.

2003 *Human Genetics for the Social Sciences*. Thousand Oaks, CA: Sage.

Caspi, A., Sugden, K., Moffitt, T.E., Taylor, A., Craig, I.W., Harrington, H.L., McClay, J., Mill, J., Martin, J., Braithwaite, A., and Poulton, R.

2003 "Influence of Life Stress on Depression: Moderation by a Polymorphism in the 5-HTT Gene." *Science* 301: 386-389.

Degler, C.N.

1991 *In Search of Human Nature: The Decline and Revival of Darwinism in American Social Thought*. Oxford: Oxford University Press.

Duncan, O.D., Featherman, D.L., and Duncan, B.

1972 *Socioeconomic Background and Achievement*. New York: Seminar Press.

Eckland, B.K.

1967 "Genetics and Sociology: A Reconsideration." *American Sociological Review* 32: 173-194.

Eysenck, H.J.

1973 *The Inequality of Man*. London: Temple Smith.

Falconer, D.S., and Mackay, T.F.C.

1996 *Introduction to Quantitative Genetics*, fourth ed. Burnt Mill, England: Longman.

Farkas, G.

2003 "Cognitive Skills and Noncognitive Traits and Behaviors in Stratification Processes." *Annual Review of Sociology* 29: 541-562.

Fischbein, S.

1980 "IQ and Social Class." *Intelligence* 4: 51-63.

Fisher, R.A.

1918 "The Correlation Between Relatives on the Supposition of Mendelian Inheritance." *Transactions of the Royal Society Edimburgh* 52, Part 2: 399-433.

Frank, R.H., and Cook, P.J.

1995 *The Winner-Take-All Society: Why the Few at the Top Get So Much More Than the Rest of Us*. New York: Free Press.

Freese, J.

2008 "Genetics and the Social Science Explanation of Individual Outcomes." *American Journal of Sociology* 114 Supplement: S1-S35.

Ganzeboom, H., Treiman, D., and Ultee, W.C.

1991 "Comparative Intergenerational Stratification Research." *Annual Review of Sociology* 17: 277-302.

Guo, G., and Stearns, E.

2002 "The Social Influences on the Realization of Genetic Potential for Intellectual Development." *Social Forces* 80: 881-910.

Harris, J.R.

1998 *The Nurture Assumption: Why Children Turn Out the Way They Do*. New York: Free Press.

Harris, K.M., Tucker Halpern, C., Smolen, A., and Haberstick, B.C.

2006 "The National Longitudinal Study of Adolescent Health (Add Health) Twin Data." *Twin Research and Human Genetics* 9: 988-997.

Hauser, R.M., Warren, J.R., Huang, M.-H., and Carter, W.Y.

2000 "Occupational Status, Education, and Social Mobility in the Meritocracy." Pp. 179-229 in *Meritocracy and Economic Inequality*, edited by K. Arrow, S. Bowles, and S. Durlauf. Princeton: Princeton University Press.

Heath, A.C., Berg, K., Eaves, L.J., Solaas, M.H., Corey, L.A., Sundet, J., Magnus, P., and Nance, W.E.

1985 "Education Policy and the Heritability of Educational Attainment." *Nature* 314: 734-736.

Herrnstein, R.J.

1973 *IQ in the Meritocracy*. Boston: Little Brown.

Herrnstein, R.J., and Murray, C.

1994 *The Bell Curve: Intelligence and Class Structure in American Life*. New York: Free Press.

Hout, M., and DiPrete, T.A.

2006 "What We Have Learned: RC28's Contributions to Knowledge about Social Stratification." *Research in Social Stratification and Mobility* 24: 1-20.

Jencks, C., Smith, M., Acland, H., Bane, M.J., Cohen, D., Gintis, H., Heyns, B., and Michelson, S.

1972 *Inequality: A Reassessment of the Effect of Family and Schooling in America*. New York: Basic Books.

Jencks, C., and Tach, L.

2006 "Would Equal Opportunity Mean More Mobility?" In *Mobility and Inequality: Frontiers of Research from Sociology and Economics*, edited by S. Morgan, D. Grusky, and G. Fields. Stanford, CA: Stanford University Press.

Jensen, A.R.

1998 *The* g *Factor: The Science of Mental Ability*. Westport, CT: Praeger.

Lenski, G.E.

1966 *Power and Privilege: A Theory of Social Stratification*. Chapel Hill, NC: University of North Carolina Press.

2005 *Ecological-evolutionary Theory: Principles and Applications*. Boulder, CO: Paradigm Publishers.

Lichtenstein, P., Pedersen, N.L., and McClearn, G.E.

1992 "The Origins of Individual Differences in Occupational Status and Educational Levels: A Study of Twins Reared Apart and Together." *Acta Sociologica* 35: 13-31.

Loehlin, J.C.

1996 "The Cholesky Approach: A Cautionary Note." *Behavior Genetics* 26: 65-69.

2005 "Resemblance in Personality and Attitudes Between Parents and Their Children: Genetic and Environmental Contributions." Pp. 192-207 in *Unequal Chances: Family Background and Economic Success*, edited by S. Bowles, H. Gintis, and M. Osborne Groves. New York: Russell Sage Foundation.

Neale, M.C., Boker, S.M., Xie, G., and Maes, H.H.

2003 *Mx: Statistical Modeling*, sixth ed. VCU Box 900126, Richmond, VA 23298: Department of Psychiatry.

Neale, M.C., and Cardon, L.R.

1992 *Methodology for Genetic Studies of Twins and Families*. Boston: Kluwer Academic Publishers.

Neale, M.C., and Maes, H.H.

Forth-coming *Methodology for Genetic Studies of Twins and Families*, draft second ed. Dordrecht: Kluwer Academic Publishers.

Nielsen, F.

2006 "Achievement and Ascription in Educational Attainment: Genetic and Environmental Influences on Adolescent Schooling." *Social Forces* 85: 193-216.

2007 "Economic Inequality, Pareto, and Sociology: The Route Not Taken." *American Behavioral Scientist* 50: 619-638.

Pareto, V.

1909 *Manuel d'économie politique*. Paris: Giard.

Pinker, S.

2002 *The Blank Slate: The Modern Denial of Human Nature*. New York: Viking.

Plomin, R., DeFries, J.C., McClearn, G.E., and Rutter, M.

1997 *Behavioral Genetics*, third ed. New York: Freeman.

Plomin, R., and Petrill, S.A.

1997 "Genetics and Intelligence: What's New?" *Intelligence* 24: 53-77.

Posthuma, D., and de Geus, E.J.C.

2006 "Progress in the Molecular-genetic Study of Intelligence." *Current Directions in Psychological Science* 15: 151-155.

Robb, G.

2007 *The Discovery of France*. New York: W.W. Norton and Company.

Rodgers, J.L., Kohler, H.-P., McGue, M., Behrman, J.R., Petersen, I., Bingley, P., and Christensen, K.

2008 "Education and Cognitive Ability as Direct, Mediating, or Spurious Influences on Female Age at First Birth: Behavior Genetic Models Fit to Danish Twin Data." *American Journal of Sociology* 114 Supplement: S202-S232.

Rosenfeld, M.J.

2008 "Racial, Educational and Religious Endogamy in the United States: A Comparative Historical Perspective." *Social Forces* 87: 1-31.

Rowe, D.C.

1994 *The Limits of Family Influence: Genes, Experience, and Behavior*. New York: Guilford.

Rowe, D.C., Vesterdal, W.J., and Rodgers, J.L.

1999 "Herrnstein's Syllogism: Genetic and Shared Environmental Influences on IQ, Education, and Income." *Intelligence* 26: 405-423.

Scarr-Salapatek, S.

1971 "Unknowns in the IQ Equation." *Science* 174: 1223-1228.

Solon, G.

1992 "Intergenerational Income Mobility in the United States." *American Economic Review* 82: 393-408.

Swift, A.

2004 "Would Perfect Mobility Be Perfect?" *European Sociological Review* 20: 1-11.

Tambs, K., Sundet, J.M., Magnus, P., and Berg, K.

1989 "Genetic and Environmental Contributions to the Covariance Between Occupational Status, Educational Attainment, and IQ: A Study of Twins." *Behavior Genetics* 19: 209-222.

Taubman, P.

1995a "On Heritability." Pp. 245-248 in *From Parent to Child: Intrahousehold Allocations and Intergenerational Relations in the United States*, edited by J.R. Behrman, R.A. Pollack, and P. Taubman. Chicago: University of Chicago Press.

1995b "Measuring the Impact of Environmental Policies on the Level and Distribution of Earnings." Pp. 269-285 in *From Parent to Child: Intrahousehold Allocations and Intergenerational Relations in the United States*, edited by J.R. Behrman, R.A. Pollack, and P. Taubman. Chicago: University of Chicago Press.

Taubman, P. (ed.)

1977 *Kinometrics: Determinants of Socioeconomic Success Within and Between Families*. Amsterdam: North-Holland.

Turkheimer, E.

2000 "Three Laws of Behavior Genetics and What They Mean." *Current Directions in Psychological Science* 5: 160-164.

Turkheimer, E., Haley, A., Waldron, M., D'Onofrio, B., and Gottesman, I.I.

2003 "Socioeconomic Status Modifies Heritability of IQ in Young Children." *Psychological Science* 14: 623-628.

The Nature of Social Reproduction: Two Paradigms of Social Mobility

Abstract: Two traditionally separate approaches to social mobility, the comparative social mobility research tradition, and the behavior genetic approach, can be reconciled into a synthetic model of socioeconomic achievement. In the synthetic model the behavior-genetic decomposition of the variance in a measure of socioeconomic success into genetic, shared environment, and unshared environment components is used to predict the intergenerational (parent-child) association for that measure. The intergenerational association is shown to be a composite of genetic and shared environment effects. The behavior-genetic decomposition of the intergenerational association illuminates interpretations of the mobility model in terms of degree of meritocracy of the stratification system, and permits consistent reformulations of the predictions of modernization theory and institutional theory. The behavior-genetic decomposition of the mobility model also opens up new perspectives on the relationships among different dimensions of socioeconomic success (such as measures of educational and economic attainment) and generates new predictions on opportunity level as function of the level of resources in the social environment, some of which turn out to be consistent with Vilfredo Pareto's classic conception of social mobility.

Keywords: social stratification, social mobility, behavior genetics, heritability, meritocracy.

François Nielsen received a BA in Sociology at Université Libre de Bruxelles (1972) and a PhD at Stanford University (1978). He has been on the faculty at McGill University and University of Chicago, and is currently a Professor of Sociology at University of North Carolina at Chapel Hill and Editor of the journal *Social Forces*. His research and teaching center on social stratification and mobility, behavior genetics, sociobiology, sociocultural evolution, quantitative methodology, and the work of Vilfredo Pareto. He has published articles in journals including *American Journal of Sociology*, *American Sociological Review*, *European Sociological Review*, *Social Forces*, and *Sociological Theory*.